DYMO® LabelManager 120P

Basic label maker with easy-to-use smart keys

User Guide

www.dymo.com

LM120P_Cover_US.indd 1 8/22/2007 10:18:32 AM

Contents

About Your New Label Maker 5
Product Registration.....5
Getting Started 5
Connecting the Power 5
Inserting the Tape Cassette 6
Using the Label Maker for the First Time 6
Getting to Know the Label Maker 7
Power 7
LCD Display 8
Settings 8
CAPS Mode 8
Num Lock 9
Backspace 9
Navigation Keys 9
Cancel 9
Formatting Your Label 9
Changing the Font Size 9
Adding Font Styles 10
Adding a Border or Underline 10
Using Symbols and Special Characters 11
Adding Symbols 11
Adding International Characters 11
Printing Options 12
Previewing Your Label 12
Adjusting the Print Contrast 12

Caring for Your Label Maker 13
Troubleshooting 14
Documentation Feedback 15
Environmental Information 16

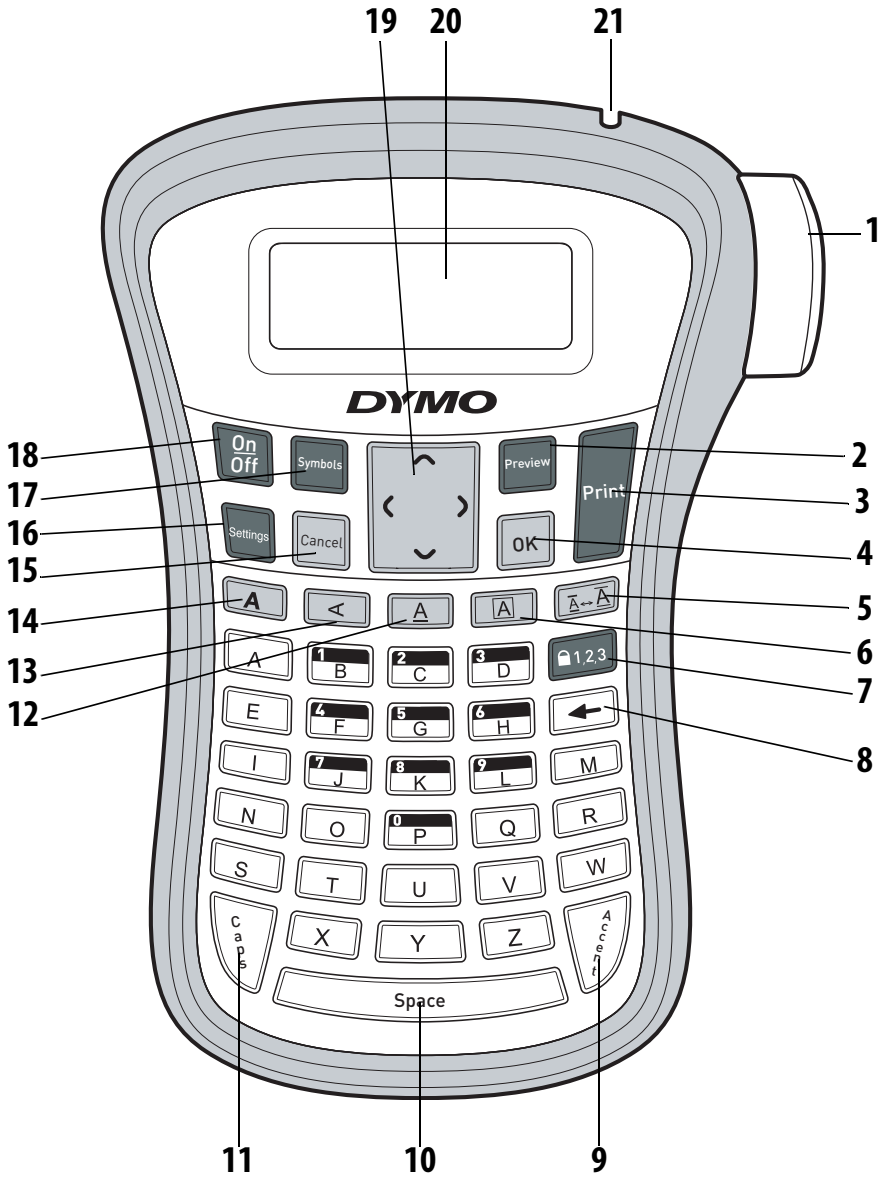

Figure 1 DYMO® LabelManager® 120P Electronic Label Maker

1	Tape cutter	**8**	Back space	**15**	Cancel
2	Preview	**9**	Accented character	**16**	Settings
3	Print	**10**	Space bar	**17**	Symbols
4	OK	**11**	Caps	**18**	On/Off
5	Size	**12**	Underline	**19**	Navigation
6	Border	**13**	Vertical	**20**	LCD Display
7	Number lock	**14**	Bold	**21**	Tape exit

About Your New Label Maker

With the DYMO® LabelManager® 120P electronic label maker, you can create a wide variety of high-quality, self-adhesive labels. You can choose to print your labels in many different font sizes and styles. The label maker uses DYMO D1 tape cassettes in widths of 3/8" (9 mm) or 1/2" (12 mm). These tape cassettes are available in a wide range of colors. Visit **www.dymo.com** for information on obtaining labels and accessories for your label maker.

Product Registration

Visit **www.dymo.com/registration** to register your label maker online.

Getting Started

Follow the instructions in this section to print your first label.

Connecting the Power

The label maker is powered by six high-capacity AA alkaline batteries. To save power, the label maker automatically turns off after two minutes of inactivity.

To insert the batteries

1. Slide the battery compartment cover away from the label maker. See Figure 2.
2. Insert the batteries following the polarity markings (+ and –).
3. Replace the cover.

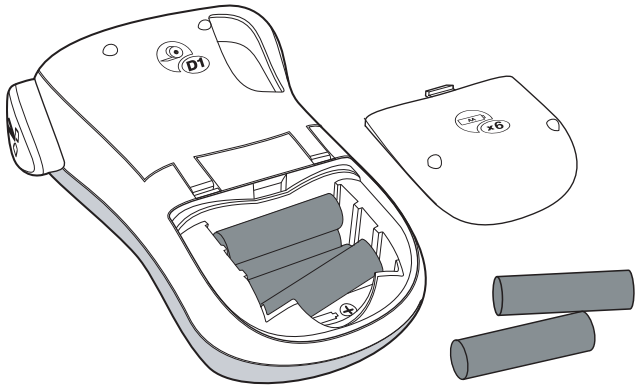

Figure 2

ⓘ Remove the batteries if the label maker will not be used for a long period of time.

Inserting the Tape Cassette

Your label maker comes with one tape cassette. Visit **www.dymo.com** for information about purchasing additional tape cassettes.

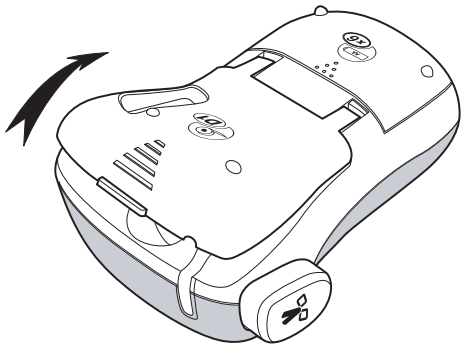

Figure 3

To insert the tape cassette

1. Lift the tape cassette cover to open the tape compartment. See Figure 3.

   ⓘ Before using the label maker for the first time, remove the protective cardboard insert from the tape exit slot. See Figure 4.
2. Insert the cassette with the label facing up and positioned between the guideposts.
3. Press firmly until cassette clicks into place. See Figure 5.
4. Close the tape cassette cover.

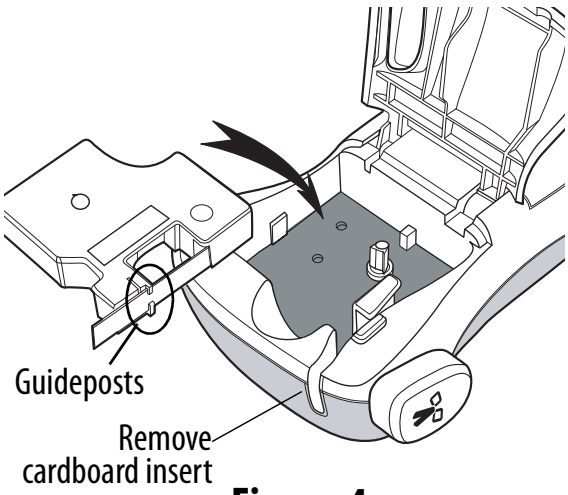

Figure 4

Using the Label Maker for the First Time

The first time you turn on the power, you are asked to select the language. This selection will remain set until you change it, or until the label maker is reset. You can change this selection using the Settings key.

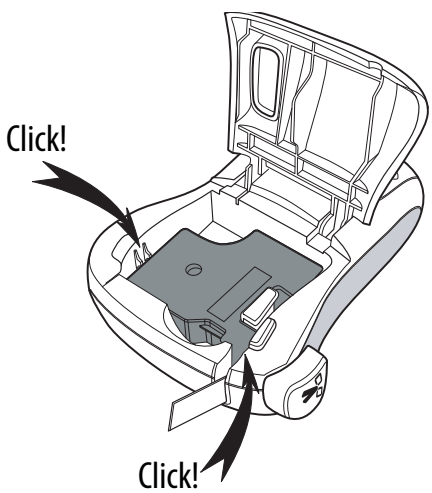

Figure 5

To set up the label maker

1. Press On Off to turn on the power.
2. Select the language and press OK.
   By default, the language is set to English. The language option you choose determines the character set that is available.
3. Select the width of the tape cassette currently in the label maker and press OK.

You are now ready to print your first label.

To print a label

1. Enter text to create a simple label.
2. Press Print.
3. Press the cutter button to cut the label.

Congratulations! You printed your first label. Continue reading to learn more about the options available for creating labels.

Getting to Know the Label Maker

Become familiar with the location of the feature and function keys on your label maker. Refer to Figure 1. The following sections describe each feature in detail.

Power

The On Off button turns the power on and off. After two minutes of no activity, the power is switched off automatically. The last label created is remembered and displayed when the power is turned back on. The previously selected style settings are also restored.

LCD Display

You can enter up to 99 characters and spaces. The display shows about 13 characters at a time. The number of characters displayed will vary due to proportional spacing.

With DYMO's exclusive graphical display, most of the formatting you add is visible instantly. For example, the border added to the text below is clearly displayed.

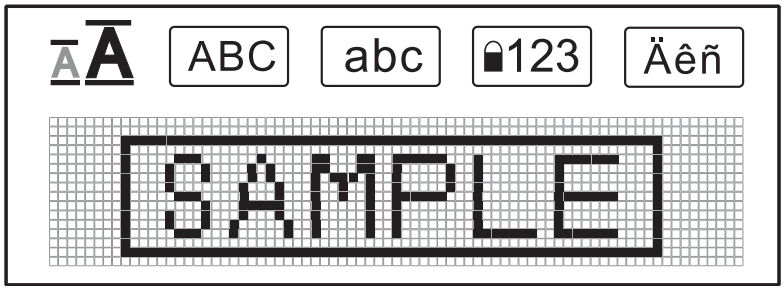

Feature indicators along the top of the LCD display appear black to let you know when a feature is selected.

Settings

The

key displays the Language, Label Width, and Contrast submenus. These features are described later in this User Guide.

CAPS Mode

The

key toggles capitalization on or off. When Caps mode is on, the Caps mode indicator is shown on the display and all letters that you enter will be capitalized. The default setting is Caps mode on. When Caps mode is off, all letters appear in lower case.

Num Lock

The

key provides access to the numbers located on some of the alphabetic keys. When Num Lock mode is turned on, the Num Lock indicator is shown on the display and the numbers 0 through 9 appear when you press the corresponding letter keys. Num Lock is turned off by default.

Backspace

The key removes the character to the left of the cursor.

Navigation Keys

You can review and edit your label using the left and right arrow keys. You can also navigate through menu selections using the up and down arrow keys, and then press

to make a selection.

Cancel

The

key allows you to exit from a menu without making a selection or to cancel an action.

Formatting Your Label

You can choose several format options to enhance the appearance of your labels.

Changing the Font Size

Two font sizes are available for your labels: Normal and Large. The font size applies to all characters on a label. The font size key toggles the font from one size to the other.

To set the font size

- Press .
  The font size indicator on the display changes as you select font sizes.

Adding Font Styles

You can choose different font styles:

AaBb	Normal
AaBb	Bold
	Vertical

The style you select applies to all characters. Styles can be used with alphanumeric characters and some symbols. The font style keys toggle the style on and off.

To add bold text

- Press .

To print vertical text

- Press .

Adding a Border or Underline

You can highlight your text by choosing a border or underline style.

Square Underline

A label can be underlined or enclosed in a border, but not both together.

To add a border

- Press .

To add an underline

- Press .

Using Symbols and Special Characters

Symbols and other special characters can be added to your labels.

Adding Symbols

The label maker supports the symbol set shown here .

To insert a symbol

1. Press Symbols.
2. Use the left and right arrow keys to move to your desired symbol. The left and right arrows move horizontally along a row of symbols. The up and down arrow keys scroll vertically through the rows of symbols.
3. When you locate the symbol, press OK to add the symbol to your label.

Position in Row				
‘	“	,	.	;
’	:	/	\	|
&	@	#	!	%
‰	¡	?	¿	_
(	)			
€	£	$	¢	¥
+	-	*	÷	√
^	~	≈	=	≠
±	<	>	≤	≥
©	®	™	CE	
α	β	γ	δ	ε
η	λ	μ	π	ϱ
σ	ω	Δ	Θ	Σ
Φ	Ω			

Adding International Characters

The label maker supports the extended Latin character set using RACE technology. After pressing the Accent key, repeatedly pressing a letter scrolls through the available variations of that letter.

For example, if French is selected as the language and you press the letter **a**, you will see **a à â æ** and so on through all the variations available. The character variations and the order in which the variations appear depend on the language you use.

To add accented characters

1. Press

.
   The accented character indicator is shown on the display.
2. Press an alpha character.
   The accent variations are displayed.
3. When the desired accented character appears, wait a few seconds for the cursor to move beyond the character to continue entering text.

Printing Options

You can preview your label and adjust the printing contrast.

Previewing Your Label

You can preview your label prior to printing.

To preview your label

- Press

.

The label length is displayed, then the text scrolls across the display.

Adjusting the Print Contrast

You can adjust the print contrast to fine tune the print quality of your label.

To set the contrast

1. Press

.
2. Select **Contrast** and press

.
3. Use the arrow keys to select a contrast setting between **1** (less contrast) and **5** (more contrast), and press

.

Caring for Your Label Maker

Your label maker is designed to give you long and trouble-free service, while requiring very little maintenance. Clean your label maker from time to time to keep it working properly. Clean the cutter blade each time you replace the tape cassette.

To clean the cutter blade

1. Remove the tape cassette.
2. Press and hold the cutter button to expose the cutter blade. See Figure 6.
3. Use a cotton ball and alcohol to clean both sides of the blade.

⚠ The cutter blade is extremely sharp. Use caution when cleaning.

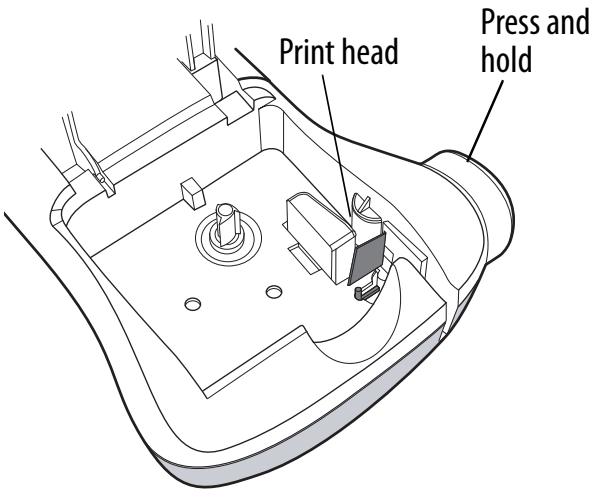

Figure 6

To clean the print head

1. Remove the tape cassette.
2. Remove the cleaning tool from inside the label compartment cover.
3. Gently wipe the padded side of the tool across the print head. See Figure 6.

Troubleshooting

Review the following possible solutions if you encounter a problem while using your label maker.

Problem/Error Message	Solution
No display	• Ensure the label maker is turned on. • Replace discharged batteries.
Poor Print Quality	• Replace batteries or attach power adapter. • Set Contrast to higher level. See **Adjusting the Print Contrast.** • Ensure tape cassette is installed properly. • Clean the print head. • Replace the tape cassette.
Poor Cutter Performance	Clean the cutter blade. See **Caring for Your Label Maker**.
Printing . . .	No action required. Message disappears when printing is finished.
Too many characters Exceeded max. number of characters	Delete some or all of the buffer text.
⚠ ▭ ⚠ Batteries almost discharged.	Replace batteries or connect AC power adapter.
Tape Jam Motor is stalled due to label jam.	• Remove jammed label; replace tape cassette. • Clean cutter blade.

If you still need assistance, contact DYMO Customer Support at (203) 588-2500. You can also visit the DYMO Web site at www.dymo.com.

Documentation Feedback

We are constantly working to produce the highest quality documentation for our products. We welcome your feedback.

Send us your comments or suggestions about our user guides. Please include the following information with your feedback:

- Product name, model number, and User Guide page number
- Brief description of instructions that are inaccurate or unclear, areas where more detail is needed, and so on

We also welcome your suggestions about additional topics you would like to see covered in the documentation.

Send email messages to: **documentation@dymo.com**

Please keep in mind that this email address is only for documentation feedback. If you have a technical question, please contact Customer Support.

Environmental Information

The equipment that you have bought requires the extraction and use of natural resources for its production. It may contain substances that are hazardous to health and the environment.

In order to avoid the dissemination of those substances in our environment, and to diminish the pressure on natural resources, we encourage you to use the appropriate take-back systems. These systems will reuse or recycle most of the materials of your end-of-life equipment in an environmentally sound way.

The crossed-bin symbol marked on your device indicates you should use these systems.

If you need more information on the collection, reuse, and recycling of this product, please contact your local or regional waste administration.

You can also contact us for more information on the environmental performance of our products.

This product is CE marked in accordance with the EMC directive and the low voltage directive and is designed to conform with the following international standards:
US FCC Class B Compatibility
Safety - UL, CUL, TUV, CE, T-Mark, SAA, BABT, C-Tick
EMC - EMI Compatibility
EN 55022; EN 61000 (+ addendums)
RoHS 2002/95/EC

www.sanford.com
Produced by:
DYMO
Stamford CT 06902
800-426-7827: www.dymo.com
©2007

A Newell Rubbermaid Company

931487